SUBJECT: LED Dock Light

Day-Brite Lighting

INSTRUCTION SHEET

WARNING: **ELECTRICAL SHOCK POTENTIAL!!** DO NOT ATTEMPT TO INSTALL, MAINTAIN OR RELAMP WITHOUT DISCONNECTING ALL POWER. FAILURE TO DISCONNECT POWER CAN RESULT IN ELECTROCUTION, SHOCK OR SEVERE BURNS.

CAUTION: This fixture is designed for permanent installation in ordinary (Non-Hazardous) locations in accordance with the National Electrical Code and all applicable local codes. Do not use in areas of limited ventilation or in high ambient enclosures. The lamp and fixture operate at high temperatures. Contact with combustible materials can cause fire and personal contact can cause severe burns.

INSTALLATION INSTRUCTIONS:

This Dock Light is designed for wall mounting and requires a minimum vertical surface of 6" wide and 7-1/2" tall. Recommend using 1/4" max diameter mounting hardware (stud or bolt) securely fastened to building structure.
(Hardware not included)

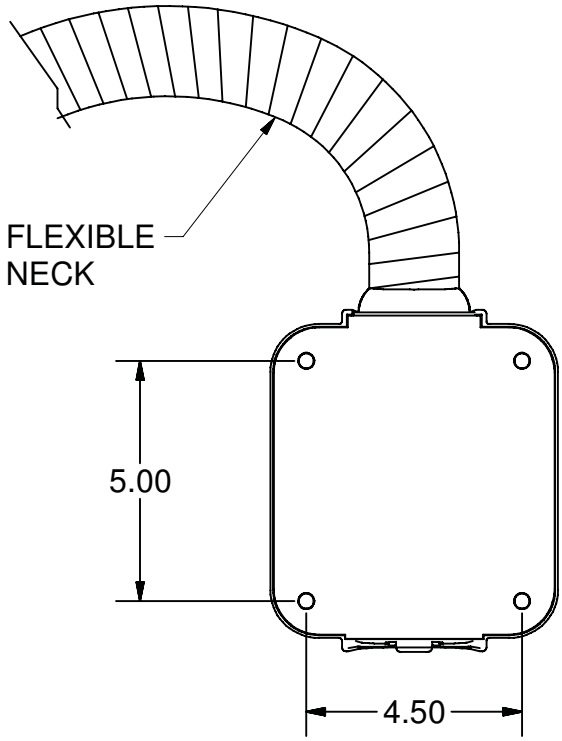

For best operation, the Dock Light should be mounted as close to the door as possible. Bottom of housing should be mounted a minimum of 3 ft from the floor, with flexible neck postioned up as shown. Some locations may require minor modifications to clear dock track, etc at door edges.

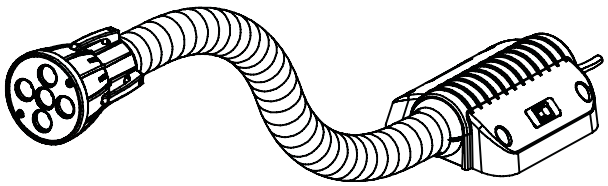

(Front) 12/2/2008 7-18210-104

SUBJECT: LED Dock Light

Day-Brite Lighting

INSTRUCTION SHEET

CAUTION: THE INSTALLATION AND SERVICING OF THIS PRODUCT SHOULD BE PERFORMED BY A QUALIFIED ELECTRICIAN OR SERVICE PERSONNEL.

L.E.D. Replacement Instructions:

1) Remove "Bezel" by removing 2 screws. (See Fig. 1)
2) Remove "LED assembly" by unplugging wire harness attached to the assembly and remove. (See Fig. 2)
3) Replace with new "LED assembly" by re-connecting wire harness and inserting "LED assembly" into housing. Then re-assemble by reversing steps 1 & 2.

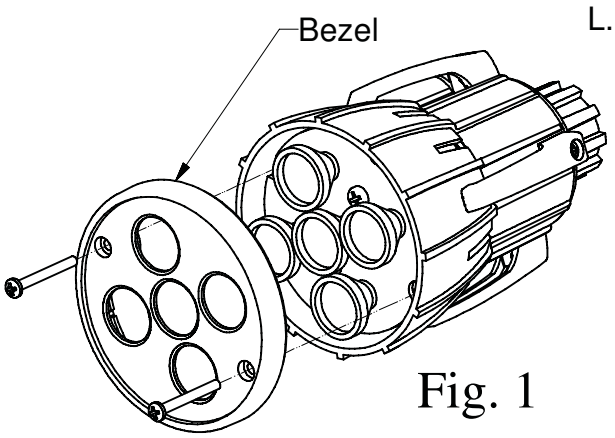

Fig. 1

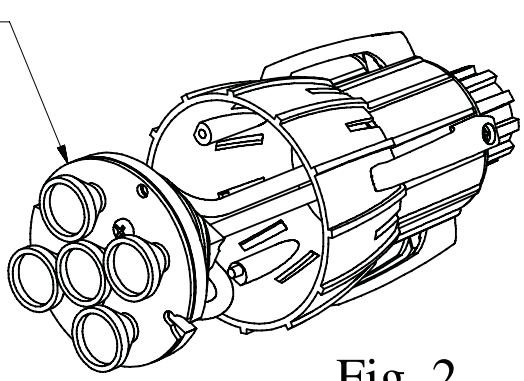

Fig. 2

L.E.D. Driver Replacement Instructions:

1) Remove "Dock Light" from wall or column.(See Fig. 3)
2) Remove "Back Plate" by removing 4 screws as shown. (See Fig. 4)
3) Disconnect power leads from "Driver".
4) Remove "Driver" by removing 2 screws. (See Fig. 5)
5) Install replacement "Driver". Then re-assemble by reversing Steps 1 through 4.

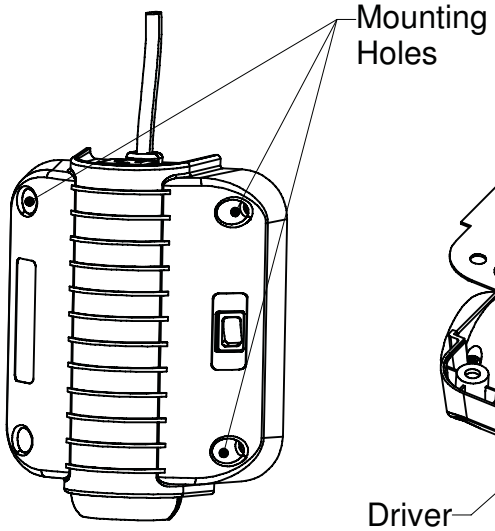

Fig. 3

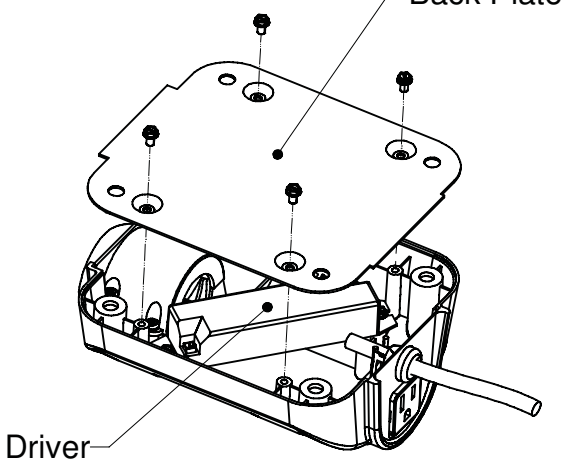

Fig. 4

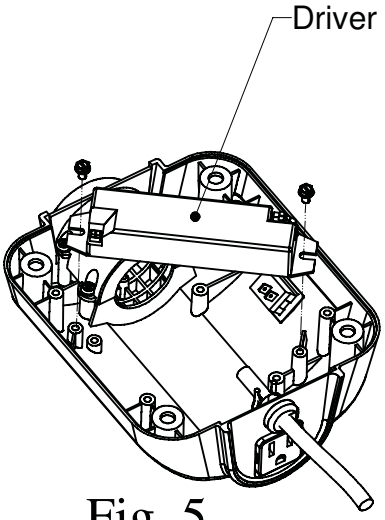

Fig. 5