## SPEX BY OMEGA
# S8-INC

# 8" HORIZONTAL A-LAMP DOWNLIGHTS

A shallow housing open reflector downlight for use with economical A type lamps. The lamp mounted horizontally provides a broad uniform light distribution with high efficiency. Excellent for use in shallow plenum spaces and for areas such as lobbies, corridors, reception areas, restaurants and offices.

## DESIGN FEATURES

- **Mounting pan** - Precision die-stamped 20 gauge galvanized steel mounting pan and yoke assembly. Accommodates ceiling materials up to 3/4" thick.
- **Installation** - Mounting pan has pre-installed universal mounting brackets with vertical adjustment. Junction box and mounting brackets are accessible from below ceiling. For 30" C - channel hanger bars, specify Q1030 accessory, ordered separately. For 27" flat bar hangers, specify Q1031 accessory, ordered separately.
- **Reflectors** - Precision spun .050 aluminum reflector, self flanged with clear specular Alzak® finish. Reflector is screw mounted for positive attachment to socket assembly. Standard flat flange is painted white. Optional polished flange matching reflector finish available, add FF to catalogue number.
- **Baffle** - Precision machined .050 aluminum with deep grooves to minimize aperture glare, anodized matte black or matte white finish. Standard flat flange is painted white. Optional black flange available, add FF to catalogue number.
- **Socket enclosure** - Die-cast aluminum heat sink, medium base 250V porcelain socket with nickel plated copper screw shell and 200°C wire positions lamp at optical focal plane of reflector for maximum performance.
- **Junction box** - Large 32-cubic inch 16 gauge galvanized steel with snap-on covers. Approved for through wiring with up to 8 #12 AWG conductors.
- **Thermal protection** - is standard.
- **cUL listed** - For use in damp locations.

## DIMENSIONS

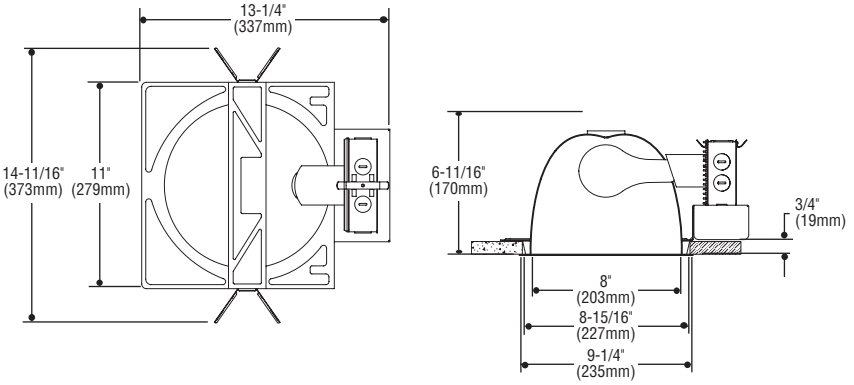


**S8H150A21-T8HCS -- IES File: 24600.IES**

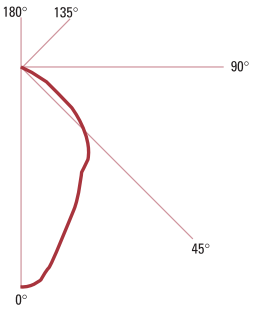


Coefficients of Utilization

| RF | 20% | RC | 80% | |
|---|---|---|---|---|
| RW | 70 | 50 | 30 | 10 |
| RCR | | | | |
| 0 | 97 | 97 | 97 | 97 |
| 1 | 91 | 88 | 85 | 83 |
| 2 | 85 | 79 | 75 | 72 |
| 3 | 79 | 72 | 67 | 62 |
| 4 | 73 | 65 | 59 | 55 |
| 5 | 68 | 59 | 53 | 48 |
| 6 | 63 | 54 | 47 | 43 |
| 7 | 59 | 49 | 43 | 38 |
| 8 | 55 | 45 | 39 | 35 |
| 9 | 51 | 41 | 35 | 31 |
| 10 | 48 | 38 | 33 | 29 |

## SAMPLE CATALOGUE NUMBER: S8HA21/23-T8HBBCS

| SPEX APTR. | LAMP (BY OTHERS) | REFLECTOR SERIES/SIZE | LAMP CONFIGURATION | REFLECTOR OPTIONS | REFLECTOR FINISH |
|---|---|---|---|---|---|
| S8 | HA21/23* | T8 | **H** - Horizontal | **BB** - Black Baffle<br>**WB** - White Baffle | **CS** - Clear Specular (low IR)<br>**CSS** - Clear Semi-Specular<br>**GS** - Champagne Gold Relfector<br>**HZ** - Haze<br>**PW** - Pewter<br>**WT** - Wheat<br>**FF** - Finish Flange<br>(As suffix to colour) |

Spec Sheet # SX 2-16
*cUL listed for A 21 lamps up to 150 watt max.
*cUL listed for A 23 lamps up to 200 watt max.