RADIANT

LED AREA LIGHTING

PHILIPS

GARDCO

FORM

With its distinctive form, advanced thermal management and sophisticated LED optics, Radiant stands tall and shines bright while providing superior efficiency and significant energy savings. Even with its low-profile design, Radiant was thoughtfully engineered to keep all components cool and manage heat thoroughly, providing a long-lasting LED solution that maximizes return on investment.

All Radiants shown in this brochure are painted in RAL 9007.

Radiant is carefully crafted for big performance without a big presence. The housing form is uniquely contemporary - a straight, strong, sculpted body with gentle curves on the side and top to soften the mass and add subtle architectural detail. Metallic screens and stainless steel rods strengthen the housing structure, prevent the buildup of contaminants and permit airflow to cool the LED components. Even with this advanced thermal management, Radiant maintains a UL Wet Location listing. An integral die cast aluminum arm allows an effortless transition from pole to luminaire, making it a natural fit in any setting, and the two size options – 32 and 46 inches long – make Radiant ideal for a range of applications.

Adding to the luminaire's versatility is its impressive optical performance. With great looks, bright light, advanced thermal management and a long life, Radiant reduces environmental impact while saving big on energy expenses – the ultimate bright idea.

CONSTRUCTION

Seamless Transitions
There are no visible transitions between components, ensuring that Radiant remains refined and satisfying from every viewing angle. Even the mounting arm is integral, allowing a seamless transition from luminaire to pole.

Added Strength
Lateral stainless steel rods run the length of the housing to provide strength and rigidity while unifying the housing structure.

Flexible Optics
Radiant can achieve IES Type II, Type III, Type IV and Type V distributions. The optical system provides full cutoff performance.

Separate Driver Compartment
Radiant is equipped with an LED driver that accepts 120V through 277V, 50hz to 60hz input. Driver output is based on the LED wattage. Component-to-component wiring within the luminaire will carry no more than 80% of rated current and is UL listed at 600VAC, 15A or higher.

Rugged Housing
Radiant combines all the best construction materials – die cast end caps, heavy gauge extruded aluminum side panels, and stainless steel rods and hardware. All hardware is concealed.

Long-Lasting Finishes
The finish is a fade- and abrasion-resistant, electrostatically applied, thermally cured TGIC powdercoat. Radiant housings are thoroughly cleaned and treated prior to paint application. Several standard colors and more than 200 optional colors are available.

No Lens Needed
Radiant requires no lens because each LED is completely sealed. An optional diffusing lens is available.

Weather-Protected Construction
Radiant is completely sealed at all points of material transition to exclude the intrusion of rain, insects and dust. Depending on mounting orientation and accessories, the luminaire is UL and CUL listed for wet locations.

Thermal Management
The Radiant housing design provides extruded aluminum integral thermal radiation fins with lateral airways in the upper housing. The allowed airflow is essential to prolong the LED system life.

RADIANT FEATURES THE ADVANCED LIGHT ARRAY LED SYSTEM, FOR CLEAR LIGHT, HIGH PERFORMANCE AND A LONG LIFE.

Light Arrays

Light Arrays harness advanced LifeLED™ technology to create varied distribution patterns for area lighting. Each Light Array includes several state-of-the-art LEDs, whose light is preset individually through a unique prismatic optical system, leading to superior light quality and precise aiming. Radiant can be specified with one or two Light Arrays, depending on the desired light level.

Light Arrays can save 30 to 50% or more on energy costs compared to many HPS or MH systems. They offer 50,000 or more hours of life, meaning lower replacement maintenance costs than other sources. Radiant's advanced thermal management ensures a long life of quality performance.

Available distributions: Type II, Type III, Type IV, Type V

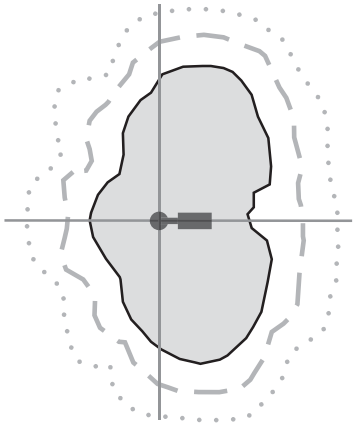

Type II Distribution

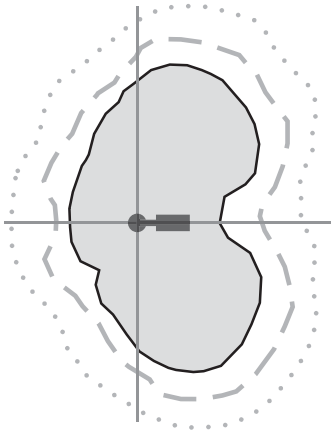

Type III Distribution

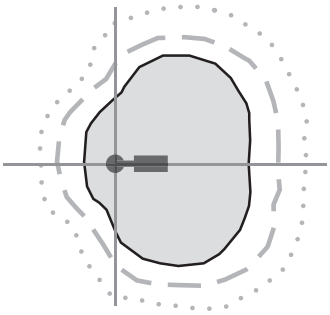

Type IV Distribution

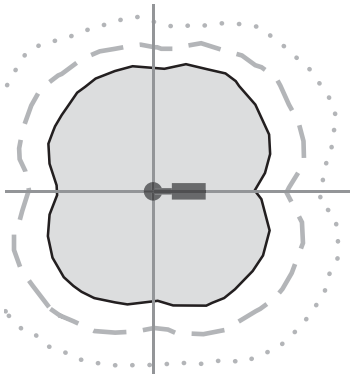

Type V Distribution

APPLICATIONS

Radiant's distinctive form combines a strong, sculpted body with gentle curves on the side and top to soften the mass. The result is a distinctly contemporary luminaire that looks at home within a variety of architectural environments.

The Radiant is available with IES Type II, Type III, Type IV and Type V distributions and full cutoff performance. It is available in housing sizes 32 and 46 inches, making it suitable for a range of applications.

The Radiant is also available as part of the Gardco Solar Radiant LED Area Lighting System.
Consult sitelighting.com for complete system details

GENERAL DESCRIPTION: Gardco Radiant luminaires combine LED performance excellence and advanced Gardco LED thermal management technology with a distinctly contemporary architectural style to provide outdoor area lighting that is both energy-efficient and aesthetically pleasing. The high-performance LED optical systems are available with IES Type II, Type III, Type IV and Type V optical systems. Gardco's LED technology provides maximized light output and maximum energy savings.

CUTOFF PERFORMANCE: Gardco Radiant luminaires provide full cutoff performance.

ORDERING

Example

PREFIX	MOUNTING	DISTRIBUTION	LED WATTAGE	LED SELECTION	VOLTAGE	FINISH	OPTIONS
RL	1	3	60LA	CW	UNIV	BRP	F

RL

1 Single Assembly
2 Twin Assembly
2@90 Twin @ 90°
3 Triple @ 90°
3@120 Triple @ 120°
4 Quad Assembly

2 Type II
3 Type III
4 Type IV
5 Type V

Ordering Code
60LA
85LA
120LA
170LA

CW
Cool White: 6500°K, 75 CRI

NW
Neutral White: 4300°K, 75 CRI

UNIV
Accepts 120V through 277V input, 50hz to 60hz.

347*
480*
** includes auxilliary transformer*

BRP Bronze Paint
BLP Black Paint
WP White Paint
NP Natural Aluminum Paint
OC Optional Color
Specify RAL Color, Ex: OC-RAL6005.
SC Special Color
Requires Color Chip.

F Fusing
LF Line Fusing
PC Photocontrol and Receptacle
Specify input voltage.
PTF2 Pole Top Fitter for 2 3/8" Tenon
PTF3 Pole Top Fitter for 3" to 3 1/2" Tenon
PTF4 Pole Top Fitter for 3 1/2" to 4" Tenon
DL Diffusing Lens
Adding diffuse lens reduces the light efficiency by 25%.
MF Mast Arm Fitter
Requires 2 3/8" OD mast arm.
SPR Surge Protection
DCC[7] Dual Circuit - LED Array Control
HS1 External House Side Shield *(60LA or 85LA only)*
HS2 2 Part External House Side Shield *(120LA or 170LA only)*
BD1[8] Bird Deterrent Spike Kit *(60LA or 85LA only)*
BD2[8] Bird Deterrent Spike Kit *(120LA or 170LA only)*

Ordering Code	Housing Length	Description	LED Qty	System Watts[1,2,3]	LED Current (mA)	Luminaire Initial Absolute Lumens[3,4]			
						Type 2	Type 3	Type 4	Type 5
60LA	32"	60 watt, (1) LED integral lens array.	54	56	311	4,078	4,228	4,241	4,217
85LA	32"	85 watt, (1) LED integral lens array.	54	87	455	5,714	5,907	5,885	5,816
120LA	46"	120 watt, (2) LED integral lens arrays.	108	112	311	7,889	8,125	7,944	7,862
170LA	46"	170 watt, (2) LED integral lens arrays.	108	174	455	11,007	11,378	11,415	11,614

PREDICTED LUMEN DEPRECIATION DATA[5]		
Ambient Temperature °C	Driver mA	L_{70} Hours[6]
25 °C	311	130,000
	455	85,000
40 °C	311	100,000
	455	60,000

1. Actual measured system watts are shown.
2. LED wattage may vary by +/- 8% due to LED manufacturer forward volt specification and ambient temperature.
3. LED arrays feature LEDs that provide 100 lumens per watt when operated at 350 mA. Luminaire initial absolute lumens per watt range from 63.3 LPW to 75.7 LPW.
4. Lumen values based on system wattage values shown. Lumens values are for luminaires utilizing the CW LED Selection, without the DL option. Multiply lumens by .9 for approximate lumen values for the NW LED selection, and by .73 for approximate lumen values with DL option. Published lumen values based on tests performed in compliance with IESNA LM-79.
5. Predicted performance derived from LED manufacturer's data and engineering design estimates, based on IESNA LM-80 methodology. Actual experience may vary due to field application conditions.
6. L_{70} is the predicted time when LED performance depreciates to 70% of initial lumen output.
7. 120LA or 170LA only. Provides dual level control capability. Each LED Array can be switched or circuited separately.
8. Kits consist of 25 (BD1) or 45 (BD2) injection molded plastic bird deterrent spikes. Field installation only.

DIMENSIONS

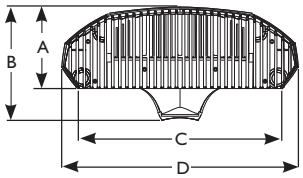

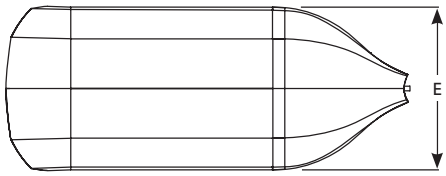

Radiant	Inches	cm
A - All	4.60"	11.692 cm
B - All	6.40"	16.256 cm
C - All	11.49"	29.177 cm
D - All	13.37"	33.950 cm
E - All	13.23"	33.604 cm
F - 60LA, 85LA	32"	81.280 cm
F - 120LA, 170LA	46"	116.84 cm

LED Wattage Housing Length	EPA (Effective Projected Area)			Single Luminaire Weight
	1	2	3/4	
60LA, 85LA 32 inch	.69 ft^2 .065 m^2	1.38 ft^2 .129 m^2	1.5 ft^2 .140 m^2	36 lbs 16.33 kg
120LA, 170LA 46 inch	1.0 ft^2 .093 m^2	2.0 ft^2 .186 m^2	3.8 ft^2 .354 m^2	43 lbs 19.51 kg

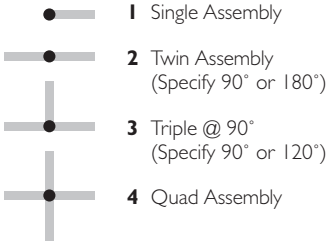

1 Single Assembly
2 Twin Assembly (Specify 90° or 180°)
3 Triple @ 90° (Specify 90° or 120°)
4 Quad Assembly

Philips Gardco reserves the right to change materials or modify the design of its product without notification as part of the company's continuing product improvement program.

Prior to ordering, consult Submittal Data Sheet on sitelighting.com for the most current information, notes and exclusions.

1611 Clovis Barker Road
San Marcos, TX 78666
512/753-1000
800/227-0758
Fax: 512/753-7855
sitelighting.com

Philips Gardco Warranty

Philips Gardco luminaires feature a five year limited warranty. For full warranty information please visit sitelighting.com.

© 2010 Koninklijke Philips Electronics N.V.

All Rights Reserved.

Document order number: G100-003/0310